A	SEAT DEPTH	430, 450, 470, 490, 510
B	SEAT WIDTH	390, 450, 510
C	SEAT ANGLE	0˚- 20˚
D	FOOTREST LENGHT	347, 389, 424, 449, 474,
E	ARMREST HEIGHT	245, 260,275, 290, 305, 320
F	WIDTH OF ARMREST	411, 471, 531 width adjustment
G	SEAT HEIGHT	490, 520
H	FOOTPLATE HEIGHT	220
I	BACKREST ADJ	0˚-30˚

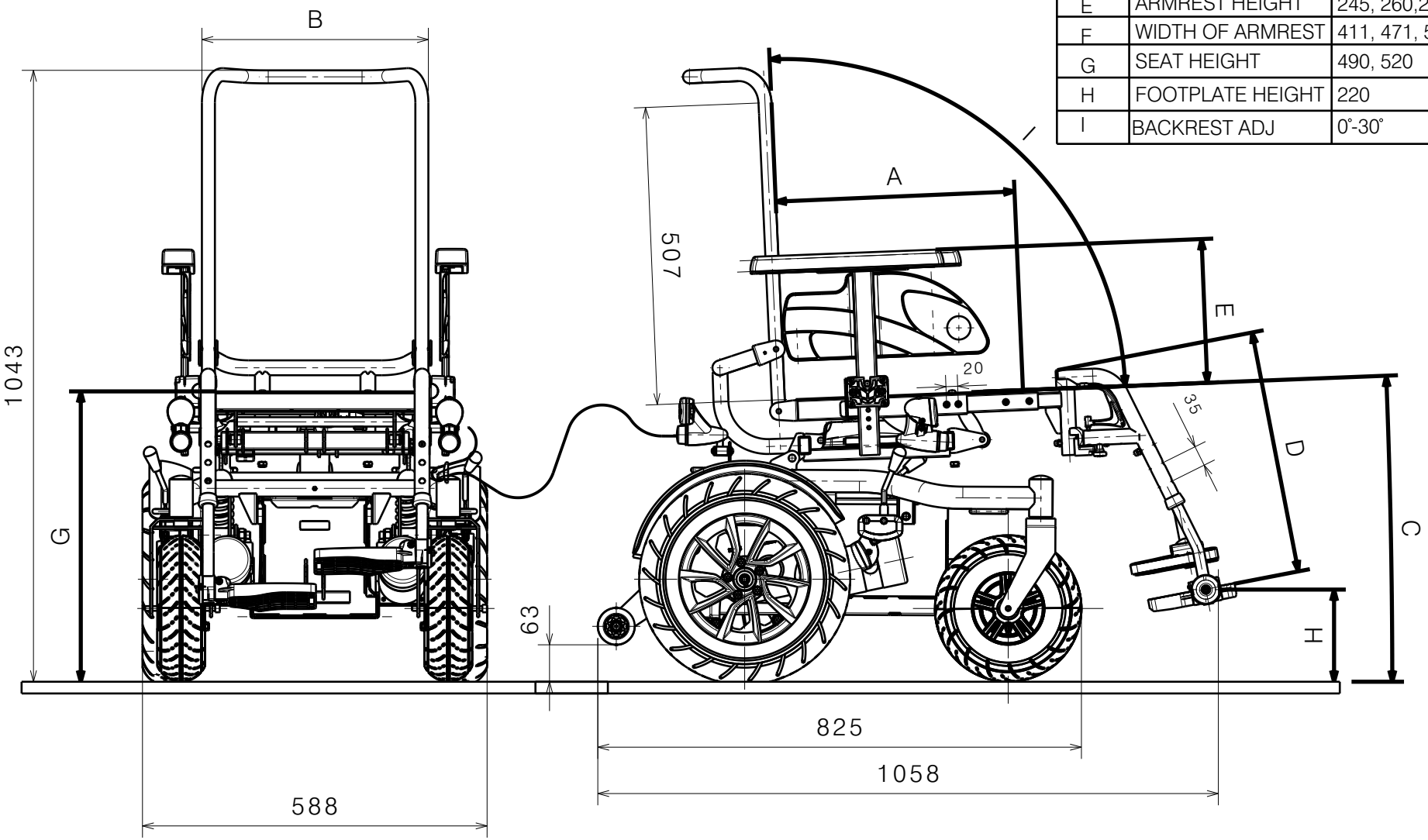

DIMENSIONS TURIOS ELECTRIC				Plan No.
				EP00480/ C
Scale: 1:10	Drafted	Verified	Confirmed	
Date	14/01/2020	30/05/2022	30/05/2022	
Initials	AS	PM	AZ	

EP00480 / C